A CBAM Based Multiscale Transformer Fusion Approach for Remote Sensing Image Change Detection

Wei Wang, Xinai Tan, Peng Zhang, and Xin Wang

***Abstract*—Change detection methods play an indispensable role in remote sensing. Some change detection methods have obtained a fairly good performance by introducing attention mechanism on the basis of the convolutional neural network (CNN), but identifying intricate changes remains difficult. In response to these problems, this article proposes a new model for detecting changes in remote sensing, namely, MTCNet, which combines the advantages of multiscale transformer with the convolutional block attention module (CBAM) to improve the detection quality of different remote sensing images. On the basis of traditional convolutions, the transformer module is introduced to extract bitemporal image features by modeling contextual information. Based on the transformer module, a multiscale module is designed to form a multiscale transformer, which can obtain features at different scales in bitemporal images, thereby identifying the changes we are interested in. Based on the multiscale transformer module, the CBAM is introduced. The CBAM is split into a spatial attention module and a channel attention module, which are applied to the front and back ends of the multiscale transformer, respectively. Spatial information and channel information of feature maps are modeled separately. In this article, the validity and efficiency of the method are verified by a large number of experiments on the LEVIR-CD dataset and the WHU-CD dataset.**

***Index Terms*—Change detection, convolutional block attention module (CBAM), multiscale, remote sensing, transformer.**

I. Introduction

THE purpose of change detection is to identify changes [1] of scenes in the same place at different times. Detecting changes in bitemporal images is useful for identifying surface changes. Remote sensing image change detection is very important in many fields such as deforestation [2], disaster loss assessment [3], land cover mapping [4], and urban expansion [5]. With the continuous breakthrough and progress of high-resolution remote sensing imaging technology, the application prospect of high-resolution bitemporal image change detection has been expanded. Automatic change detection technology can save a lot of manpower and material resources, which is why it is getting more and more attention [2], [5], [6], [7], [8], [9], [10], [11], [12], [13], [14], [15], [16].

Fig. 1. For two pictures taken at the same place at different times, the same object appears in different colors. For example, the part marked by the red box in the figure belongs to the same building, so we regard it as an object that has not changed in the label, but in fact they show different colors.

The generation of high-resolution remote sensing images not only makes the data sources for civilian aspects such as land use and urban planning more convenient, but also has more important significance for military target recognition and battlefield environment simulation. Methods for detecting changes based on high-resolution optical remote sensing images are still in need of improvement. Same objects exhibit different spectral features at different times due to the influence of nonlinear changes in grayscale, perspective distortions caused by different viewpoints, shadows and projection differences, as shown in Fig. 1. In order to identify interesting changes in complex scenes, remote sensing image change detection models need to model the context of feature maps adequately. Recently, the development history of remote sensing image change detection has changed from pure convolutions to convolutions plus attention mechanism to convolutions plus transformer. Due to the vigorous development of the CNNs [17], [18], [19], [20], it has also been applied to the field of remote sensing image change detection and achieved good results. Recent supervised methods for change detection in remote sensing images exploit the powerful feature extraction capability of the CNNs to extract high-level semantic features in bitemporal images to capture changes of interest. Modeling contextual information in both temporal and spatial locations is important for capturing changes of interest

Manuscript received 3 April 2022; revised 11 July 2022; accepted 9 August 2022. Date of publication 15 August 2022; date of current version 26 August 2022. This work was supported in part by the Key Research and Development Projects of Hunan Province under Grant 2020SK2134, in part by the Natural Science Foundation of Hunan Province under Grant 2022JJ30625, in part by the Science and Technology Plan Project of Changsha under Grant kq2004071, and in part by the Scientific Research Project of Hunan Provincial Department of Education under Grant 20C1249. *(Corresponding author: Xin Wang.)*

Wei Wang, Xinai Tan, and Xin Wang are with the School of Computer and Communication Engineering, Changsha University of Science and Technology, Changsha 410114, China (e-mail: wangwei@csust.edu.cn; 1343963652@qq.com; wangxin@csust.edu.cn).

Peng Zhang is with the School of Electronics and Communication Engineering, Shenzhen Campus of Sun Yat-sen University, Shenzhen 518107, China (e-mail: zhangpeng5@mail.sysu.edu.cn).

Digital Object Identifier 10.1109/JSTARS.2022.3198517

This work is licensed under a Creative Commons Attribution-NonCommercial-NoDerivatives 4.0 License. For more information, see https://creativecommons.org/licenses/by-nc-nd/4.0/

in remote sensing images. Some recent network architectures are constructed by stacking more convolutional layers [5], [6], [7], [14], applying attention mechanisms [5], [6], [8], [9], [10], [11], [12] and using transformer [15], [16] to extract features. Unlike pure convolutional methods, attention-based [5], [6], [8], [9], [10], [11], [12] methods can model contextual relationships better. However, it is difficult to model contextual relationships adequately by using attention mechanisms alone.

Some recent studies have introduced transformers based on the CNNs. To achieve good results, some networks extract features by convolutions, and then use transformer [15] to obtain contextual information in bitemporal images. There are also some networks that use transformer to encode the feature map and then use multilayer perceptron (MLP) to decode [16], which also achieved amazing results. However, the extraction of feature information at different scales in bitemporal images needs to be strengthened.

To overcome the above challenges, the article designs the transformer module to model the context information on the basis of traditional convolutions. Then, a multiscale module is designed so that the network can extract features at different scales in the variation of interest. Finally, the CBAM [21] is designed to model pixel-to-pixel connections better. Synthesizing the above methods, the traditional convolutions, transformer module, multiscale module and CBAM are synthesized to form MTCNet. The main contributions of this article are listed as follows:

1) Transformer is introduced to model the contextual information of bitemporal images better, which is beneficial to identify interesting changes and exclude irrelevant changes.
2) Based on the transformer module, a multiscale module is designed to form a multiscale transformer, which can obtain features at different scales in bitemporal images.
3) The CBAM is introduced. The CBAM is split into a SAM and a CAM, which are, respectively, applied to the front and back ends of the multiscale transformer. Model the spatial information and channel information of the feature map separately.

The structure of the rest of this article is as follows: Section II is related work, which describes the development status and difficulties of remote sensing image change detection technology and our proposed solutions. The introduction of the model structure is in Section III, including the transformer module, the multiscale module and the CBAM. The introduction of the experiment, including the experimental preparation, the comparison experiment, the ablation experiment and the experimental analysis, are in Section IV. Section V concludes this article.

II. Related Work

The mainstream of remote sensing image change detection methods is to use traditional convolutions combined with attention mechanism as the network structure to extract the features of bitemporal images for difference or Euclidean distance to obtain the change map. Image-level methods [2], [22], [23], [24] combine bitemporal images into a single input directly to a semantic segmentation network to generate a change map. The feature-level method [5], [6], [8], [9], [10], [11], [14], [22], [25], [26], [27], [28], [29] is the feature of the bitemporal image extracted by the neural network, and then generates change map through feature fusion.

Many works have achieved good results by designing multiscale modules [5], [8], [9], [11], [26], [29] to extract information at different scales, but they cannot model contextual relationships. Because objects have intricate changes, modeling of contextual information is crucial for identifying changes of interest in images. Therefore, many recent works have introduced attention mechanisms [5], [6], [8], [9], [10], [11], [12] to model contextual information, such as spatial attention mechanism [8], [9], [10], self-attention mechanism [5], [6], [12], and channel attention mechanisms [8], [9], [10], [11]. However, due to the limited capacity of the attention mechanism, it is still difficult for most networks to adequately model the contextual relationship.

Recently, transformer has been widely used in various fields. Some people also use transformer to detect changes in remote sensing images [15], [16], and achieve good results. Transformer first achieved good results in the field of natural language processing [30]. The first transformer model for computer vision (CV) has achieved good results in image classification [31], [32], [33] and other fields. Because of its powerful ability to model contextual information, it is used for image classification [31], [32], [33], object detection [34], [35], [36], semantic segmentation [37], [38], [39], and other fields, and they all showed amazing results. Transformer models perform well on natural language processing and CV tasks and have attracted considerable attention in remote sensing. Some people apply transformer to the research of remote sensing works, such as remote sensing image segmentation [38], [39] and remote sensing image change detection [15], [16]. For example, a transformer-based method has recently been proposed to detect changes in remote sensing images. The features images are extracted by CNN, and the extracted features are entered into the semantic tokenizer to mark the global semantic information. And the global semantic information of the tag is modeled by the transformer, so that the model can identify the changes of interest better.

The main idea of this article is to combine the advantages of convolutions, transformer, multiscale and CBAM to build a network. First, spatial information is very important to remote sensing images. Modeling the spatial information of remote sensing images can help the network to find areas of interest in remote sensing images better. Therefore, the article selects SAM to model the spatial information of feature maps. Then, there will be a lot of interference information near the changed area that affects the judgment of the network, so this article uses transformer to model the context information of the area of interest. Considering that the changing objects have multiple scales, this article designs a multiscale transformer module to extract feature information at different scales. Finally, since there are changing information and irrelevant information on multiple channels, in order to better combine the changing information on each channel, The CAM is used to model the relationship between feature map channels. In terms of results, MTCNet shows very good results.

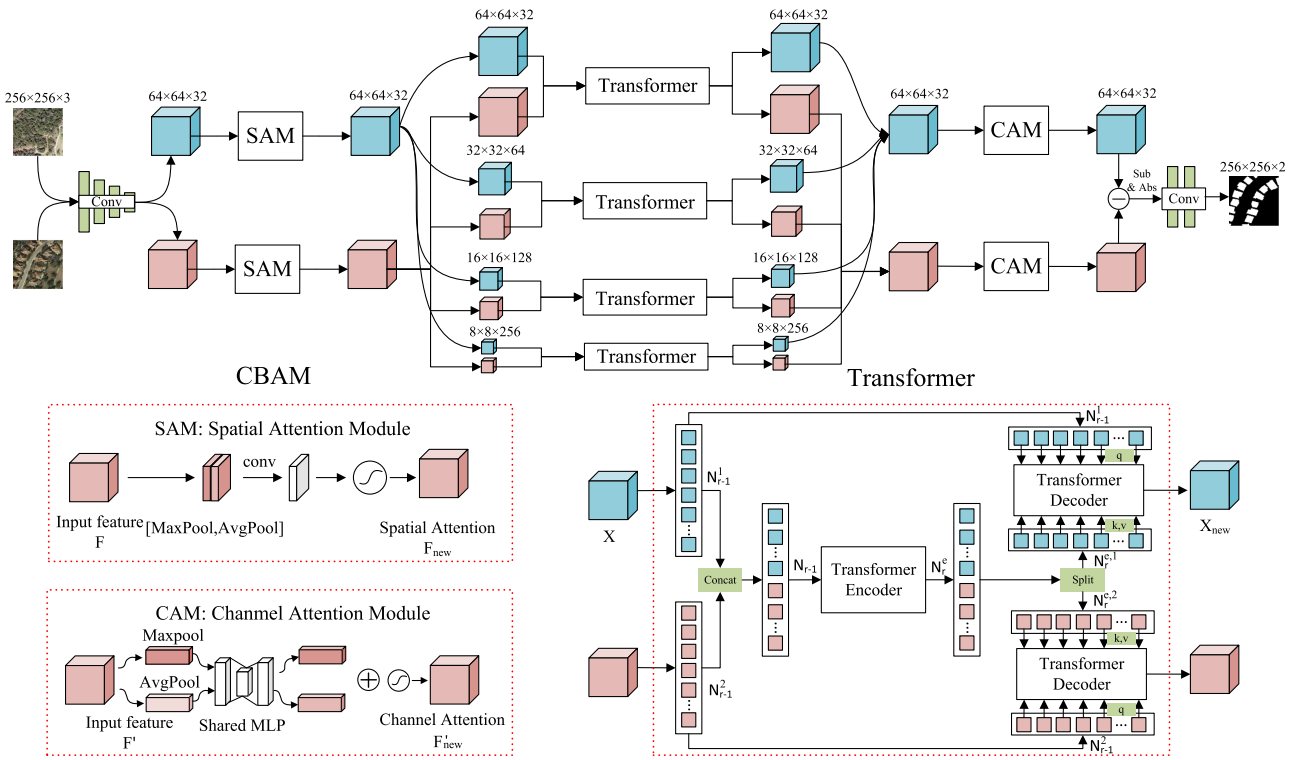

Fig. 2. Overall structure of MTCNet model.

III. Model Structure

The overall process of the model is shown in Fig. 2. MTCNet mainly has three modules: 1) Transformer module, which models contextual information so that pixel-to-pixel connections are established. 2) Multiscale module, which obtain information at different scales of changing objects. 3) CBAM can model contextual information better. Features in the image are extracted through the CNN backbone (ResNet18 [40]). The SAM establishes a preliminary connection between the pixels of the feature map. Four feature maps with different scales are obtained by convolutions and downsampling. The feature maps at each scale are entered into the transformer module separately. Transformer modules are used to model global semantic information. Four feature maps with the same number of heights, widths, and channels are obtained by convolution and upsampling. The four feature maps are merged by addition. The CAM further model contextual information. Finally, the change map is obtained by taking the difference of the two feature maps.

A. Transformer Module

Modeling the contextual information of an image is crucial for improving the accuracy of change detection in remote sensing images, which enables the network to reduce misjudgments caused by factors such as illumination changes. Therefore, we introduce the transformer network to model the contextual information of the image. As shown in Fig. 3, the transformer module is composed of transformer encoder and transformer decoder.

For the input feature map $X_i(i=1,2) \in \mathbb{R}^{H\times W\times C}$ is divided into many token sequences with the same length and width

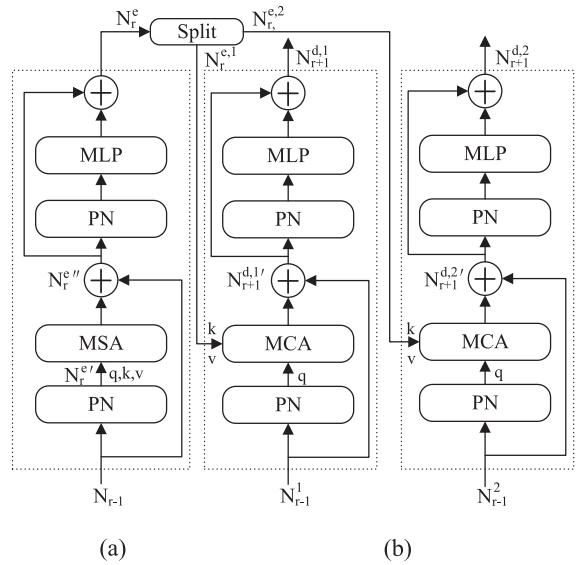

Fig. 3. Illustration of transformer encoder and transformer decoder. (a) Transformer Encoder. (b) Transformer Decoder.

$N^i(i=1,2) \in \mathbb{R}^{L\times C}$, merge N^1 and N^2 into N, and then input N into the transformer network. The multihead self-attention (MSA), MLP, and multihead cross-attention (MCA) are the core of transformer.

Assuming that the input sequence of layer r is N_{r-1}. $N_r^{e'}$ is obtained through PreNorm module as follows:

$$N_r^{e'} = PN\left(N_{r-1}\right) \tag{1}$$

where $N_r^{e\,'}$ is the input of the MSA module, PN represents the PreNorm. The specific formula of MSA can be expressed as

$$\text{MSA}\left(N_{r-1}\right) = \text{Concat}\left(A_1, \ldots, A_h\right) W^O \tag{2}$$

$$A_j = \sigma\left(\frac{\left(N_r^{e\,'} W_j^q\right)\left(N_r^{e\,'} W_j^k\right)^T}{\sqrt{d}}\right)\left(N_r^{e\,'} W_j^v\right) \tag{3}$$

where Concat represents the connection operation, σ represents a softmax function, *j* represents a random layer, W_j^q, W_j^k, $W_j^v \in \mathbb{R}^{C\times d}$, $W^O \in \mathbb{R}^{hd\times C}$ are learnable parameter matrix, *A* is the attention head, *h* represents the number of attention heads, *r*-1 represents the number of layers, *d* represents the channel dimension. The calculation process of MSA is as follows:

$$N_r^{e\,''} = \text{MSA}\left(PN\left(N_{r-1}\right)\right) + N_{r-1}. \tag{4}$$

In general, the calculation process of transformer encoder is as follows:

$$N_r^e = \text{MLP}\left(PN\left(N_r^{e\,''}\right)\right) + N_r^{e\,''} \tag{5}$$

where $N_r^{e\,''}$ is the output of the MSA module and N_r^e is the output of the MLP module. PN represents the PreNorm and MLP represents the MLP.

In order to better realize the information interaction of the bitemporal images, MSA in transformer decoder is replaced with MCA, which is embodied in the *q* comes from the sequence of tokens that did not go through the transformer encoder layer, and *k* and *v* come from the sequence of tokens after going through the transformer encoder layer. Split *N* into N^1 and N^2, and then enter N^1 and N^2 into the transformer decoder network respectively.

Assuming that the input sequence of layer *r* is N_r. The specific formula of MCA can be expressed as

$$\text{MCA}\left(N_{r-1}^i, N_r^{e,i}\right) = \text{Concat}\left(A_1, \ldots, A_h\right) W^O \tag{6}$$

$$A_j = \sigma\left(\frac{\left(PN\left(N_{r-1}^i\right) W_j^q\right)\left(N_r^{e,i} W_j^k\right)^T}{\sqrt{d}}\right)\left(N_r^{e,i} W_j^v\right) \tag{7}$$

where Concat represents the connection operation, σ represents a softmax function, *j* represents a random layer, W_j^q, W_j^k, $W_j^v \in \mathbb{R}^{C\times d}$, $W^O \in \mathbb{R}^{hd\times C}$ are learnable parameter matrix, *A* is the attention head, *h* represents the number of attention heads, *r*-1 represents the number of layers, d represents the channel dimension.

The calculation process of MCA is as follows:

$$N_{r+1}^{d,i\,'} = \text{MCA}\left(\, PN\left(N_{r-1}^i\right),\ N_r^{e,i}\right) + N_{r-1}^i. \tag{8}$$

In general, the calculation process of transformer decoder is as follows:

$$N_{r+1}^{d,i} = \text{MLP}\left(PN\left(N_{r+1}^{d,i\,'}\right)\right) + N_{r+1}^{d,i\,'} \tag{9}$$

where $N_{r+1}^{d,i\,'}$ is the output of the MCA module and $N_{r+1}^{d,i}$ is the output of the MLP module. PN represents the PreNorm and MLP represents the MLP.

B. Multiscale Module

The design of the multiscale transformer is inspired by the pyramid pooling module (PPM [41]). The information at different scales in the feature map is extracted by designing four transformers with different scales. Then, the information at all scales is fused by addition to obtain a feature map with multiscale information.

After passing through the SAM, the feature map X_1 is obtained. Four feature maps of different sizes X_1, X_2, X_3, X_4 are obtained by convolutions and downsampling of X_1. Enter them into the corresponding transformers at different scales for feature extraction to get $X_1^{\text{new}}, X_2^{\text{new}}, X_3^{\text{new}}, X_4^{\text{new}}$. The feature maps with the same number of heights, widths, and channels as X_1^{new} are obtained by different convolutions and upsampling of $X_2^{\text{new}}, X_3^{\text{new}}, X_4^{\text{new}}$, respectively. Finally, the four feature maps are merged by addition. Formally, MST can be defined as

$$\text{MST}\left(X_i\right) = \sum_{i=1}^{4}\left(uc_i\left(\text{Tran}_i\left(dc_i\left(X_i\right)\right)\right)\right) \tag{10}$$

where Tran_i represents the Transformer module, uc_i represents upsampling and convolution, dc_i represents downsampling and convolution.

C. CBAM

The convolutional block attention module (CBAM) is composed of the spatial attention module (SAM) and the channel attention module (CAM). Disassemble the SAM and the CAM in the CBAM and put them into the front and back ends of the multiscale transformer module, respectively. The role of the SAM is to model the spatial information of the feature map before the feature map enters the transformer module, which is conducive to modeling context information of the feature map in the transformer module better. The function of the CAM is to integrate the respective information in the process of merging the four feature maps after the feature maps are merged by the four scale transformers. Therefore, the changes of interest of the feature map can be indentify better.

1) SAM: In the SAM, each pixel in the feature map is encoded into the spatial attention map, and weights are assigned to each pixel by training the SAM. The changed part will be assigned a higher weight, and the unchanged part will be assigned a lower weight. In this way, the network will better identify areas of change.

First, the feature map F goes through max pooling layers and average pooling layers, respectively. The obtained feature maps are spliced in the channel dimension. Then, features are extracted by convolution. Finally, each pixel is assigned a new weight after through the sigmoid function. The specific formula is as follows:

$$F_{new} = \sigma\ \left(f^{7\times 7}\left(\text{Concat}\left(AP(F),\ MP(F)\right)\right)\right) \tag{11}$$

where $f^{7\times 7}$ represents a 7×7 convolution kernel, AP represents AvgPool, MP represents MaxPool, Concat represents the connection operation, and σ represents sigmoid function.

2) CAM: The channel feature map is generated using the relationship between the channels of the features. To efficiently

TABLE I
DETAILED INTRODUCTION OF ALL COMPARATIVE EXPERIMENTS

FC-EF [22]	Aggregating bitemporal images into one input and putting it into the fully convolutional network (FCN) network, which belongs to the image-level method.
FC-Siam-Di [22]	The bitemporal images are input to the Siamese FCN encoding layer for encoding, the obtained features are differened, and then the obtained multi-scale features are aggregated into the FCN decoding layer, which belongs to the feature-level method.
FC-Siam-Conc [22]	The bitemporal images are input into the Siamese FCN encoding layer for encoding, and then the obtained multi-scale features are aggregated into the FCN decoding layer, which belongs to the feature-level method.
BIT [15]	The bitemporal images are respectively entered into Siamese ResNet for feature extraction, and the obtained feature maps are converted into token sequences and merged. The obtained token equences enter the Transformer encoding layer, and the obtained token sequences are split and entered into the Transformer decoding layer respectively, which belong to the feature-level method.
SNUNet [13]	The bitemporal images are input to UNet for feature extraction, and the obtained multi-scale feature map is simultaneously input to the ensemble channel attention module (ECAM), and the features of different scales are aggregated, which belongs to the feature-level method.
ChangeFormer [16]	The bitemporal images are input into the Siamese Transformer for feature extraction, and the obtained multi-scale features are respectively differened and merged into the MLP module, which belongs to the feature-level method.

compute channel attention, the spatial dimension of the input feature map is compressed. To aggregate spatial information, an average pooling layer is usually employed. To collect unique object features for inferring finer channel attention, we employ max-pooling layers. Therefore, object features are extracted through average pooling and max pooling.

The feature map F' goes through the the maximum pooling layer and average pooling layer to get $F^C_{\max}$ and F^C_{avg}, respectively. The addition is performed directly after they enter the shared MLP. A new weight is assigned to each pixel through the softmax function. The specific formula is as follows:

$$F'_{\text{new}} = \sigma\left(\text{MLP}\left(\text{AP}\left(F'\right) + \text{MLP}\left(\text{MP}\left(F'\right)\right)\right.\right. \tag{12}$$

where σ represents the softmax function, AP represents AvgPool, MP represents MaxPool, and MLP includes two linear layers and a ReLU activation function.

IV. EXPERIMENT

A. Experiment Preparation

1) Dataset: This article conducts experiments on LEVIR-CD dataset and WHU-CD dataset.

LEVIR-CD: The dataset consists of 637 pairs of high resolution images, each with a size of 1024 × 1024 pixels, and the spatial resolution of the images is 0.5 m. The image data acquisition time for this dataset varies from 2002 to 2018. The bitemporal images in this dataset come from 20 different regions in several cities in Texas, USA. Slice the dataset LEVIR-CD into 256 × 256 pixels. Obtained 7120 pairs of training set, 1024 pairs of evaluation set, and 2048 pairs of test set. In this article, 2136 pairs of training sets, 288 pairs of evaluation sets, and 648 pairs of test sets with obvious label changes are selected as the datasets of this article.

WHU-CD: This dataset consists of a pair of two high-resolution images of size 32507 × 15354 pixels, and the spatial resolution of the images is 0.075 m. After cropping it into many 256 × 256 pixels images, 2066 pairs of training sets, 340 pairs of evaluation sets, and 620 pairs of test sets as the data sets of this article are randomly selected.

2) Experimental Details: The experiment selects F1-score, recall, overall accuracy, and intersection over union (IoU) as evaluation indicators [15]. Models are implemented on PyTorch, and all experiments are performed on AMD Ryzen 7 4800H with Radeon Graphics (CPU), NVIDIA GeForce RTX 2060 (GPU). Perform general data augmentation on the input image, including scaling, flipping, cropping, and Gaussian blur. The cross-entropy loss was chosen as the loss function and the stochastic gradient descent (SGD) algorithm was used as the optimizer. Learning rate, momentum, weight decay,and epoch are set to 0.01, 0.99, 0.0005, and 200, respectively.

B. Experiment of Comparison

To comfirm the validity of MTCNet, this article selects several representative networks in the field of change detection in recent years as a comparative experiment. FC-EF [22], FC-Siam-Di [22], and FC-Siam-Conc [22] are networks based on pure convolutions, SNUNet [13] is a network based on convolutions, attention mechanism and multiscale, BIT [15] is a network base on convolutions and transformer. ChangeFormer [16] is a network based on transformer, MLP, and multiscale. The detailed introduction of all comparative experiments is shown in Table I. MTCNet is a method based on the combination of convolutions, transformer, multiscale, and CBAM. To fairly compare the effectiveness of the models, all methods are tested on AMD Ryzen 7 4800H with Radeon Graphics (CPU), NVIDIA GeForce RTX 2060 (GPU).

1) LEVIR-CD Dataset: The visualization of the results of the comparative experiment part is shown in Fig. 4. The pixels of the same object may show different states in different times and spatial locations, which makes it very difficult for the model to detect the changes of interest. As can be seen from Fig. 4, the pure convolutional networks [see Fig. 4(d)–(f)] are easy to misjudge this change. Modeling the context information can

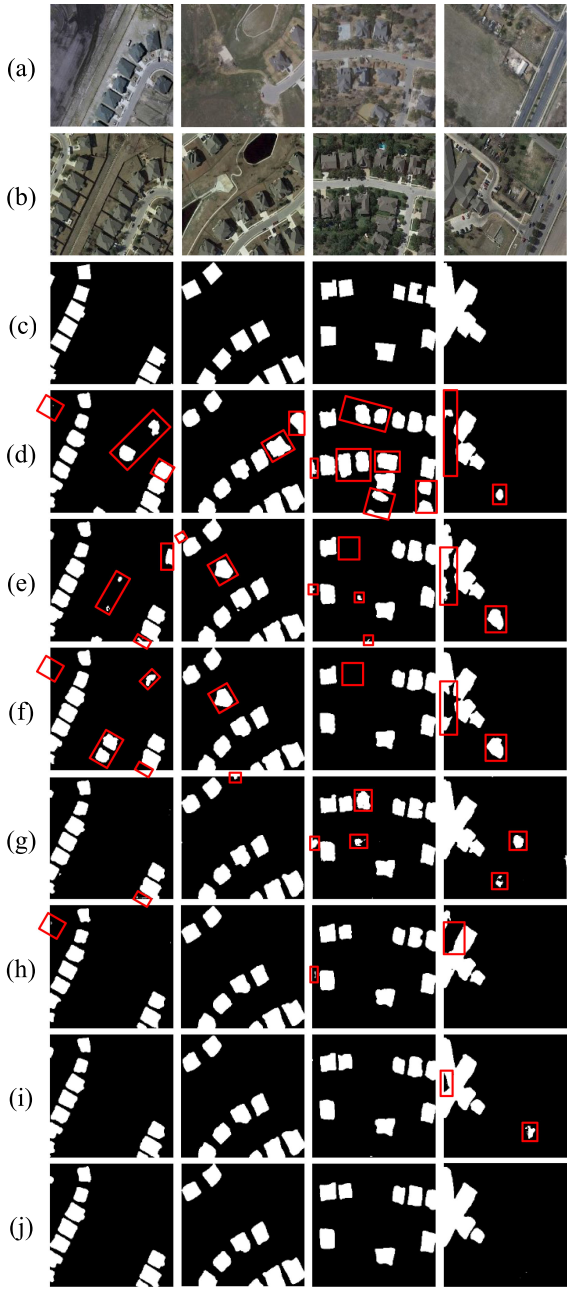

Fig. 4. Visualize some of the results of the comparative experiment on the LEVIR-CD dataset. (a) is Fig. 1, (b) is Fig. 2, (c) is the truth map, (d) is FC-EF, (e) is FC-Siam-Conc, (f) is FC-Siam-Di, (g) is SNUNet, (h) is BIT, (i) is ChangeFormer, (j) is MTCNet. Black represents unchanged areas and white represents changed areas.

make the model detect the changes of interest. For example, SNUNet [see Fig. 4(g)] can improve the effect by using the attention mechanism. BIT [see Fig. 4(h)] has achieved good results because of the powerful modeling context information ability of transformer, but it is a little difficult to identify the information of different scales. ChangeFormer [see Fig. 4(i)] makes use of Transformer's powerful ability of modeling context information and multiscale's ability of recognizing features at different scales. The effect is obviously better than Fig. 4(d)–(h). By combining the advantages of convolutions, transformer, multiscale, and CBAM, MTCNet [see Fig. 4(j)] is obviously better than Fig. 4(d)–(i).

TABLE II
EXPERIMENTAL RESULTS OF THE COMPARATIVE EXPERIMENT ON THE LEVIR-CD TEST SET (%)

	Params(M)	OA	IoU	F1	Rec
FC-EF [22]	1.35	94.71	71.30	83.24	85.34
FC-Siam-Conc [22]	1.54	96.02	77.16	87.12	87.49
FC-Siam-Di [22]	1.35	95.43	73.83	84.94	83.87
BIT [15]	3.55	96.45	78.20	87.76	82.82
SNUNet [13]	3.01	96.48	79.45	88.55	88.43
ChangeFormer [16]	29.73	96.76	80.61	89.26	87.56
MTCNet	5.80	**97.02**	**82.22**	**90.24**	**89.62**

TABLE III
EXPERIMENTAL RESULTS OF THE COMPARATIVE EXPERIMENT ON THE WHU-CD TEST SET (%)

	Params(M)	OA	IoU	F1	Rec
FC-EF [22]	1.35	96.47	59.33	74.48	74.59
FC-Siam-Conc [22]	1.54	90.70	36.55	53.53	77.50
FC-Siam-Di [22]	1.35	90.46	33.82	50.55	70.55
BIT [15]	3.55	96.92	66.99	80.23	90.39
SNUNet [13]	3.01	96.77	66.21	79.67	91.65
ChangeFormer [16]	29.73	**97.58**	68.67	81.43	76.71
MTCNet	5.80	97.33	**70.43**	**82.65**	**91.90**

The evaluation indicators results of the comparative experiments are shown in Table II. According to Table II, it can be seen that the pure convolutional method is less effective than adding transformer, attention mechanism, and multiscale. Therefore, MTCNet combines the advantages of convolutions, transformer, multiscale, and CBAM to show the best results. Specifically, MTCNet's OA (97.02), IoU (82.22), F1 (90.24), and Rec (89.62) are better than the other six networks.

2) WHU-CD Dataset: The visualization of the results of the comparative experiment part is shown in Fig. 5. The WHU-CD dataset has super high resolution and can clearly identify small objects such as cars on the ground, so it will generate more interference information and lead to network misjudgment. As can be seen from Fig. 5, the pure convolution networks [see Fig. 5(d)–(f)] misjudge small objects such as cars. From the performance of Fig. 5(g), it can judge small objects better by introducing the attention mechanism to model the context information. However, insufficient modeling of context information leads to misjudgment caused by some interference information. From the performance of Fig. 5(h), (i), through the powerful context information modeling ability of transformer, it can perform much better than Fig. 5(d)–(g). From the performance of Fig. 5(j), the best results are achieved by combining the advantages of convolution, transformer, multiscale, and CBAM, but there are still some misjudgments for many details.

The evaluation indicators results of the comparative experiments are shown in Table III. According to Table III, it can be found that pure convolutional networks (FC-EF, FC-Siam-Conc, Fc-Siam-Di) are far less effective at identifying super-resolution than adding transformer, attention mechanisms, and multiscale networks. Therefore, MTCNet combines the advantages of convolution, transformer, multiscale, and CBAM to show the best results. Specifically, MTCNet's IoU (70.43), F1 (82.65), and Rec

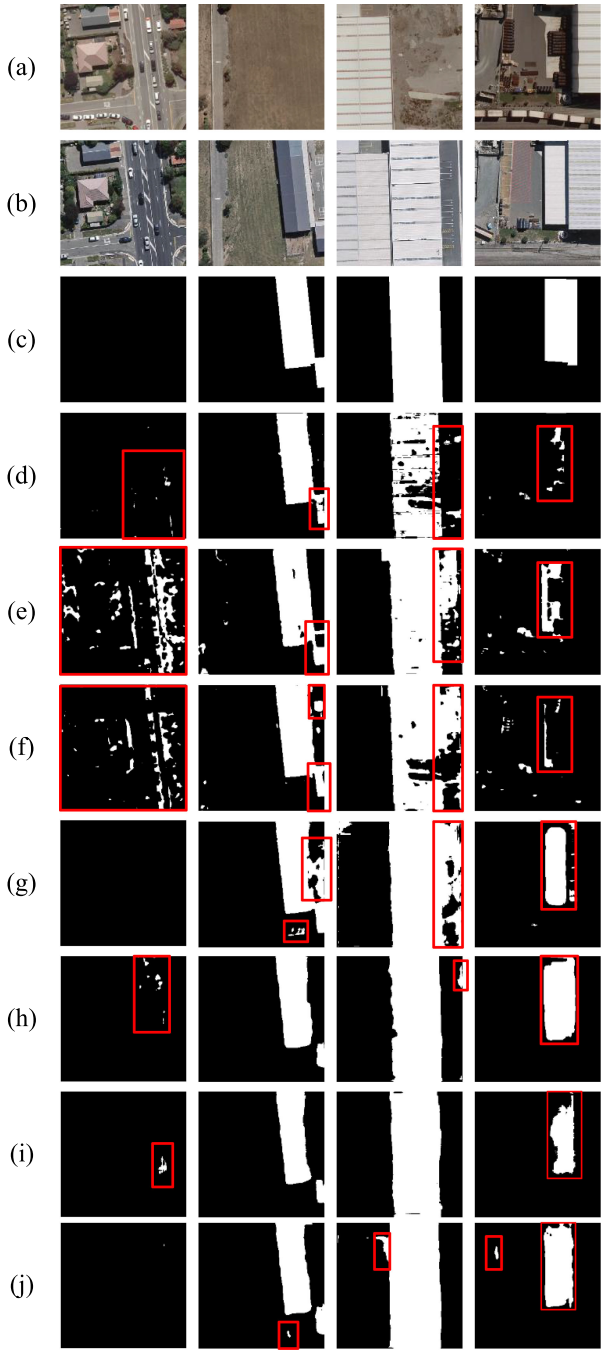

Fig. 5. Visualize some of the results of the comparative experiment on the WHU-CD dataset. (a) is Fig. 1, (b) is Fig. 2, (c) is the truth map, (d) is FC-EF, (e) is FC-Siam-Conc, (f) is FC-Siam-Di, (g) is SNUNet, (h) is BIT, (i) is ChangeFormer, (j) is MTCNet. Black represents unchanged areas and white represents changed areas.

(91.90) are better than the other six networks, and OA (97.33) is lower than ChangeFormer.

Overall, MTCNet is a more ideal model. The results show that the combination of transformer, multiscale structure, and CBAM in the traditional convolutional change detection network has a good recognition effect on the changes of interest in the LEVIR-CD dataset and the WHU-CD dataset.

TABLE IV
EXPERIMENTAL RESULTS OF THE TF MODULE ABLATION EXPERIMENT ON THE LEVIR-CD TEST SET (%)

Method	F1-score	IoU
Base	86.23	75.79
Base+TF	**88.86**	**79.95**

TABLE V
EXPERIMENTAL RESULTS OF THE TF MODULE ABLATION EXPERIMENT ON THE WHU-CD TEST SET (%)

Method	F1-score	IoU
Base	77.80	63.67
Base+TF	**80.23**	**66.99**

TABLE VI
EXPERIMENTAL RESULTS OF MULTI-SCALE TRANSFORMER MODULE ABLATION EXPERIMENTS ON LEVIR-CD TEST SET (%)

Method	Pyramid Scale				F1-score
	1	2	3	4	
MTCNet_1	√				87.76
MTCNet_2		√			88.86
MTCNet_4			√		81.88
MTCNet_8				√	69.13
MTCNet_1_2	√	√			87.91
MTCNet_1_2_4	√	√	√		88.83
MTCNet_1_2_4_8	√	√	√	√	**89.42**

C. Ablation Experiment

1) Transformer Module: Transformer has achieved good results in image classification, semantic segmentation, and other fields, and we also try to introduce transformer into MTCNet. In order to verify the influence of transformer on MTCNet, the importance of transformer to the network is verified by removing the transformer module in the network. Base in the Tables IV and V represents the most basic convolutional network, and TF represents the transformer module.

2) Multiscale Module: Subscale is very important for multiscale transformer, this article designs several different combinations of pyramid scales. Therefore, four scales (1, 2, 4, 8) are selected to analyze, which scale contributes the most to the network performance. When the scale is 1, the feature map of size 64×64 pixels is input into the transformer module. When the scale is 8, the feature map of size 8×8 pixels is input into the transformer module. Since the feature map of size 4×4 pixels is too small and the amount of computation is not small, smaller scales are not considered. According to Tables VI and VII, we can find that when the scale is (1, 2, 4, 8), the experimental effect is the best. That is to say, more abundant information can be extracted by fusing features at different scales.

3) CBAM: In order to verify the effect of adding the CBAM on MTCNet, the SAM is added to the multiscale Transformer for experiments, and then the CAM is added for experiments. TF_m4 in the table represents MTCNet_1_2_4_8 in the multiscale transformer module. The experimental results are shown in Tables VIII and IX.

TABLE VII
EXPERIMENTAL RESULTS OF MULTI-SCALE TRANSFORMER MODULE ABLATION EXPERIMENTS ON WHU-CD TEST SET (%)

Method	Pyramid Scale				F1-score
	1	2	3	4	
MTCNet_1	√				80.23
MTCNet_2		√			79.23
MTCNet_4			√		75.41
MTCNet_8				√	71.94
MTCNet_1_2	√	√			80.56
MTCNet_1_2_4	√	√	√		80.71
MTCNet_1_2_4_8	√	√	√	√	**80.97**

TABLE VIII
EXPERIMENTAL RESULTS OF THE CBAM ABLATION EXPERIMENT ON THE LEVIR-CD TEST SET (%)

Mehthod	F1-score	IoU
TF_m4	89.42	80.86
TF_m4+SAM	89.89	81.63
TF_m4+SAM+CAM	**90.24**	**82.22**

TABLE IX
EXPERIMENTAL RESULTS OF THE CBAM ABLATION EXPERIMENT ON THE WHU-CD TEST SET (%)

Mehthod	F1-score	IoU
TF_m4	80.97	68.03
TF_m4+SAM	81.87	69.30
TF_m4+SAM+CAM	**82.65**	**70.43**

V. CONCLUSION

In this article, a model MTCNet integrating multiscale transformer and CBAM is proposed. Based on the CNN, MTCNet combines multiscale transformer with CBAM for change detection. MTCNet can solve the problem that the same object shows different spectra due to perspective deformation caused by different viewpoints. It can extract the features of feature maps at different scales. It can synthesize the features of shallow layer and deep layer, and can identify complex targets in remote sensing images. MTCNet has carried out a large number of experiments on LEVIR-CD dataset and WHU-CD dataset to verify the effectiveness of the method. But the attention mechanism and transformer used in this article are the earliest. As the technology advances, there will be new attention mechanisms and transformers that can model the contextual information of feature maps better. In the future, we will study some new attention mechanisms and transformers and then apply them to the field of remote sensing images.

REFERENCES

[1] A. Singh, "Review article digital change detection techniques using remotely-sensed data," *Int. J. Remote Sens.*, vol. 10, no. 6, pp. 989–1003, 1989.

[2] P. de Bem and R. T. Gomes et al., "Change detection of deforestation in the Brazilian Amazon using landsat data and convolutional neural networks," *Remote Sens.*, vol. 12, no. 6, Mar. 2020, Art. no. 901.

[3] J. Z. Xu et al., "Building damage detection in satellite imagery using convolutional neural networks," 2019, *arXiv:1910.06444*. [Online]. Available: https://arxiv.org/abs/1910.06444

[4] S. Jin et al., "A comprehensive change detection method for updating the national land cover database to circa 2011," *Remote Sens. Environ.*, vol. 132, pp. 159–175, 2013.

[5] H. Chen and Z. Shi, "A spatial-temporal attention-based method and anew dataset for remote sensing image change detection," *Remote Sens.*, vol. 12, no. 10, May 2020, Art. no. 1662.

[6] J. Chen et al., "DASNet: Dual attentive fully convolutional Siamese networks for change detection in high-resolution satellite images," *IEEE J. Sel. Topics Appl. Earth Observ. Remote Sens.*, vol. 14, pp. 1194–1206, Nov. 2020.

[7] M. Zhang and W. Shi, "A feature difference convolutional neural network-based change detection method," *IEEE Trans. Geosci. Remote Sens.*, vol. 58, no. 10, pp. 7232–7246, Oct. 2020.

[8] Y. Liu et al., "Building changedetection for remote sensing images using a dual-task constrained deepsiamese convolutional network model," *IEEE Geosci. Remote Sens. Lett.*, vol. 18, no. 5, pp. 811–815, May 2021.

[9] C. Zhang et al., "A deeply supervised image fusion network for change detection in high resolution bi-temporal remote sensing images," *ISPRS J. Photogrammetry Remote Sens.*, vol. 166, pp. 183–200, Aug. 2020.

[10] X. Peng et al., "Optical remote sensing image change detection based on attention mechanism and image difference," *IEEE Trans. Geosci. Remote Sens.*, vol. 59, no. 9, pp. 7296–7307, Sep. 2021, doi: 10.1109/TGRS.2020.3033009.

[11] H. Jiang et al., "PGA-SiamNet: Pyramid feature-based attention-guided Siamese network for remote sensing orthoimagery building change detection," *Remote Sens.*, vol. 12, no. 3, Feb. 2020, Art. no. 484.

[12] F. I. Diakogiannis, F. Waldner, and P. Caccetta, "Looking for change? Roll the dice and demand attention," *Remote Sens.*, vol. 13, Sep. 2021, doi: 10.3390/RS13183707.

[13] S. Fang, K. Li, J. Shao, and Z. Li, "SNUNet-CD: A densely connected Siamese network for change detection of VHR images," *IEEE Geosci. Remote Sens. Lett.*, vol. 19, 2022, Art. no. 8007805, doi: 10.1109/LGRS.2021.3056416.

[14] M. Zhang et al., "Triplet-based semantic relation learning for aerial remote sensing image change detection," *IEEE Geosci. Remote Sens. Lett.*, vol. 16, no. 2, pp. 266–270, Feb. 2019.

[15] H. Chen, Z. Qi, and Z. Shi, "Remote sensing image change detection with transformers," *IEEE Trans. Geosci. Remote Sens.*, vol. 60, Jul. 2021, Art. no. 5607514, doi: 10.1109/TGRS.2021.3095166.

[16] W. G. C. Bandara and V. M. Patel, "A transformer-based Siamese network for change detection," Mar. 2022, *arXiv:2201.01293v6*. [Online]. Available: https://doi.org/10.48550/arXiv.2201.01293

[17] W. Wang et al., "Woodland labeling in Chenzhou, China, via deep learning approach," *Int. J. Comput. Intell. Syst.*, vol. 13, no. 1, pp. 1393–1403, Sep. 2020.

[18] W. Wang et al., "An advanced deep residual dense network (DRDN) approach for image super-resolution," *Int. J. Comput. Intell. Syst.*, vol. 12, pp. 1592–1601, Dec. 2019.

[19] W. Wang et al., "A novel image classification approach via Dense-MobileNet models," *Mobile Inf. Syst.*, vol. 2020, Jan. 2020, Art. no. 7602384, doi: 10.1155/2020/7602384.

[20] W. Wang, Y. Yang, X. Wang, W. Wang, and J. Li, "Development of convolution neural network and its application in image classification: A survey," *Opt. Eng.*, vol. 58, 2019, Art. no. 040901.

[21] S. Woo, J. Park, J.-Y. Lee, and I. S. Kweon, "CBAM: Convolutional block attention module," in *Proc. Eur. Conf. Comput. Vis.*, 2018, pp. 3–19.

[22] R. C. Daudt, B. Le Saux, and A. Boulch, "Fully convolutional Siamese networks for change detection," in *Proc. 25th IEEE Int. Conf. Image Process.*, 2018, pp. 4063–4067.

[23] M. A. Lebedev et al., "Change detection in remote sensing images using conditional adversarial networks," *Int. Arch. Photogrammetry, Remote Sens. Spatial Inf. Sci.*, vol. XLII-2, pp. 565–571, May 2018.

[24] D. Peng, Y. Zhang, and H. Guan, "End-to-end change detection forhigh resolution satellite images using improved UNet++," *Remote Sens.*, vol. 11, no. 11, Jun. 2019, Art. no. 1382.

[25] T. Bao, C. Fu, T. Fang, and H. Huo, "PPCNET: A combined patchlevel and pixel-level end-to-end deep network for high-resolution remote sensing image change detection," *IEEE Geosci. Remote Sens. Lett.*, vol. 17, no. 10, pp. 1797–1801, Oct. 2020.

[26] B. Hou, Q. Liu, H. Wang, and Y. Wang, "From W-Net to CDGAN: Bitemporal change detection via deep learning techniques," *IEEE Trans. Geosci. Remote Sens.*, vol. 58, no. 3, pp. 1790–1802, Mar. 2020.
[27] Y. Zhan et al., "Change detection based on deep Siamese convolutional network for optical aerial images," *IEEE Geosci. Remote Sens. Lett.*, vol. 14, no. 10, pp. 1845–1849, Oct. 2017.
[28] B. Fang, L. Pan, and R. Kou, "Dual learning-based Siamese framework for change detection using bi-temporal VHR optical remote sensing images," *Remote Sens.*, vol. 11, no. 11, May 2019, Art. no. 1292.
[29] H. Chen, W. Li, and Z. Shi, "Adversarial instance augmentation for building change detection in remote sensing images," *IEEE Trans. Geosci. Remote Sens.*, vol. 60, Mar. 2021, Art. no. 5603216, doi: 10.1109/TGRS.2021.3066802.
[30] A. Vaswani et al., "Attention is all you need," in *Proc. 31st Conf. Neural Inf. Process. Syst.*, I. Guyon et al., Eds., 2017, pp. 5998–6008.
[31] A. Dosovitskiy et al., "An image is worth 16×16 words: Transformers for image recognition at scale," Jun. 2021, *arXiv:2010.11929*. [Online]. Available: https://arxiv.org/abs/2010.11929
[32] H. Touvron et al., "Training data-efficient image transformers & distillation through attention," 2020, *arXiv:2012.12877*. [Online]. Available: https://arxiv.org/abs/2012.12877
[33] B. Wu et al., "Visual transformers: Token-based image representation and processing for computer vision," 2020, *arXiv:2006.03677*. [Online]. Available: https://arxiv.org/abs/2006.03677
[34] D. Zhang et al., "Feature pyramid transformer," in *Proc. Eur. Comput. Vis.*, A. Vedaldi, H. Bischof, T. Brox, and J.-M. Frahm, Eds., 2020, pp. 323–339.
[35] X. Zhu et al., "Deformable DETR: Deformable transformers for end-to-end object detection," in *Proc. Int. Conf. Learn. Representations*, 2021, pp. 1–26. [Online]. Available: https://openreview.net/forum?id=gZ9hCDWe6ke
[36] N. Carion et al., "End-to-End object detection with transformers," in *Proc. Eur. Conf. Comput. Vis. Lecture Notes Comput. Sci.*, A. Vedaldi, H. Bischof, T. Brox, and J.-M. Frahm, Eds., vol. 12346, 2020, pp. 213–229.
[37] S. Zheng et al., "Rethinking semantic segmentation from a sequence-to-sequence perspective with transformers," in *Proc. IEEE/CVF Conf. Comput. Vis. Pattern Recognit.*, 2021, pp. 6877–6886.
[38] L. Wang et al., "A novel transformer based semantic segmentation scheme for fine-resolution remote sensing images," *IEEE Geosci. Remote Sens. Lett.*, vol. 19, Jan. 2022, Art. no. 6506105, doi: 10.1109/LGRS.2022.3143368.
[39] E. Xie et al., "SegFormer: Simple and efficient design for semantic segmentation with transformers," Oct. 2021, *arXiv:2105.15203*. [Online]. Available: https://arxiv.org/abs/2105.15203
[40] K. He et al., "Deep residual learning for image recognition," in *Proc. IEEE Conf. Comput. Vis. Pattern Recognit.*, 2016, pp. 770–778.
[41] H. Zhao et al., "Pyramid scene parsing network," in *Proc. IEEE Conf. Comput. Vis. Pattern Recognit.*, 2017, pp. 6230–6239.

Wei Wang received the B.S., M.S. and Ph.D. degrees in information and communication engineering from National University of Defense Technology Changsha, China, in 1997, 2003, and 2010, respectively.

He is currently a Professor with the School of Computer and Communication Engineering, Changsha University of Science and Technology, Hunan, China. His research interests include signal processing, computer vision, and pattern recognition.

Xinai Tan received the B.S. degree in information and computer science from the Changsha University, Changsha, China, in 2020. He is currently working toward the M.S. degree in computer technology from the School of Computer and Communication Engineering, Changsha University of Science and Technology, Changsha, China.

His research interests include change detection, semantic segmentation, and computer vision.

Peng Zhang received the B.S. degree in microwave engineering from National University of Defense Technology, Changsha, China, in 1997, and the M.S. and Ph.D. degrees in information and communication engineering from National University of Defense Technology, Changsha, China, in 2000 and 2004, respectively.

He is currently an Associate Professor with the School of Electronics and Communication Engineering, Shenzhen Campus of Sun Yat-sen University, Shenzhen, China. His research interests include high resolution satellite remote sensing image processing and application, target detection and recognition in optical and SAR images.

Xin Wang received the B.S. and M.S. degrees in information and communication engineering from Wuhan University of Technology, Wuhan, China, in 1998 and 2006, respectively.

She is currently a Lecturer with the School of Computer and Communication, Changsha University of Science and Technology, Hunan, China. Her research interests include signal processing, computer vision, and pattern recognition.